MC1300 CONE MODULE FEATURES

Handles “all in feed” to enable attrition crushing

TC1300 cone crusher with all roller bearing design for outstanding crushing efficiency

Liner profiles to suit most applications for high versatility

Hydraulically adjustable closed side setting for easy adjustments

Crusher discharge chute with dust enclosure

Repositionable bracing permits three locations for discharge conveyor

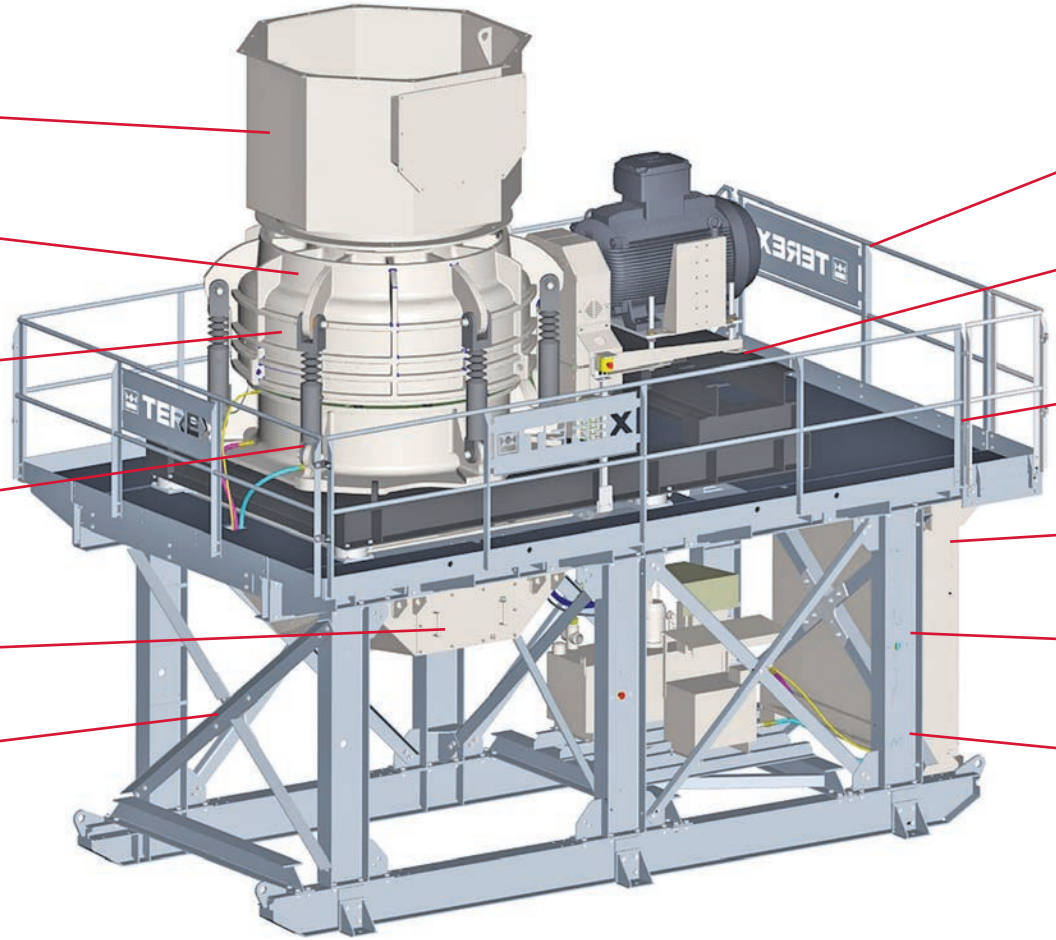

Bolt together on-site, quick setup time with basic tools

Live frame assembly including drive, drive guard, and AV mounts

Galvanized steel structure including walkways, steps and guard rails

Pre-wired “plug and play” design, minimal on-site wiring

CE compliant structure and components

Entire module easily transports in two containers

www.terexmps.com

Effective Date: February 2013. Product specifications and prices are subject to change without notice or obligation. The photographs and/or drawings in this document are for illustrative purposes only. Refer to the appropriate Operator’s Manual for instructions on the proper use of this equipment. Failure to follow the appropriate Operator’s Manual when using our equipment or to otherwise act irresponsibly may result in serious injury or death. The only warranty applicable to our equipment is the standard written warranty applicable to the particular product and sale and Terex makes no other warranty, express or implied. Products and services listed may be trademarks, service marks or trade-names of Terex Corporation and/or its subsidiaries in the USA and other countries. All rights are reserved. Terex is a registered trademark of Terex Corporation in the USA and many other countries. © 2013 Terex Corporation.

Terex® Minerals Processing Systems, 909 17th Street NE, Cedar Rapids, IA 52402 USA ▪ Tel +1 319 363 3511 ▪ Fax +1 319 399 4871 ▪ www.terexmps.com

Form 25973 (2/13)

WORKS FOR YOU.™